Product Overview

Highlights

- Comprehensive Layer 1 switching feature set for the Netvisor ONE Operating System
- Built on high-performance low-latency open networking switches
- High-density interface flexibility for 1, 10, 25, 40 and 100 Gigabit Ethernet connections
- Distributed architecture enables flexible and geographically distributed deployments
- Programmable software-defined architecture enables API-driven automation
- Intelligent Layer 1-4 filtering and distributed traffic mirroring
- Embedded monitoring telemetry for pervasive network and application visibility
- Integrated with Quali CloudShell for end-to-end automation

Pluribus VirtualWire Solution

Enabling programmable Layer 1 physical switching for automated lab and diverse cross-connect requirements

Pluribus VirtualWire™ is an integrated physical layer feature set for the Netvisor® ONE Operating System (OS) that enables native Layer 1 switching capabilities on open networking hardware switches. VirtualWire transforms a traditional electrical Ethernet connection to emulate a physical wired connection so that interconnections are mapped between two or more physical ports in single switch, or across a multi-switch topology. As a result, VirtualWire enables the creation of a virtualized, software-defined patch panel that allows modern IP switching silicon to create transparent physical layer connections between devices. As a result, interconnected devices see each other as being directly connected, with all frames passed through the interconnected ports as if they are connected by a physical wire. This enables all protocols and anomalous packets, such as CRC errors, to be exchanged to allow for unmodified, native connectivity and transparent failure propagation.

Built on Netvisor ONE

Netvisor ONE is an open, secure and programable next-generation network OS that is purpose-built to optimize the power and performance of bare metal open networking switching hardware. Deployment-proven in production mission-critical enterprise and carrier networks, Netvisor ONE meets the most stringent performance requirements and delivers reliability and flexibility at scale without compromise. Built on a Linux foundation and open networking standards, Netvisor ONE is a best-in-class, full-featured network OS that delivers an extensive range of advanced network services and Layer 2 and Layer 3 switching to assure interoperability and operational consistency with existing traditional networking platforms, enabling a seamless transition to a disaggregated open networking strategy.

Next-Generation Software-Defined Architecture

Representing the next generation of software-defined networking (SDN) technology, the Adaptive Cloud Fabric™ provides automated plug-and-play operation to enable a powerful and holistic software-defined network that adapts to change, improves efficiency and streamlines operations. The simple, distributed architecture dramatically simplifies network topologies and enables automation with a single point of control without the need for SDN controllers. The Adaptive Cloud Fabric is a simple and secure peer-to-peer distributed architecture that clusters Netvisor ONE-powered fixed configuration switches into a symmetrical, unified operating domain.

The Adaptive Cloud Fabric features a distributed control plane that allows federated switches to be operated and managed as a single, distributed virtualized switch. Each physical switch maintains its own individual control and data plane to ensure high performance and resiliency. The dynamic fabric architecture overcomes the geographic distribution limitations inherent in controller-based architectures and eliminates unwanted network traffic generated by controller communications.

The VirtualWire feature set brings Layer 1 functionalities to enable the physical layer connectivity needed for transparent interconnection. VirtualWire leverages the software-defined programmability of Netvisor ONE OS and the advanced capabilities and distributed architecture of the Adaptive Cloud Fabric architecture to enable the rapid and automated creation of Layer 1 switched connections between devices, automating operations. In addition to Layer 1 functionality, Netvisor ONE enables applying advanced network services to traffic as may be required without adding additional latency or traffic degradation.

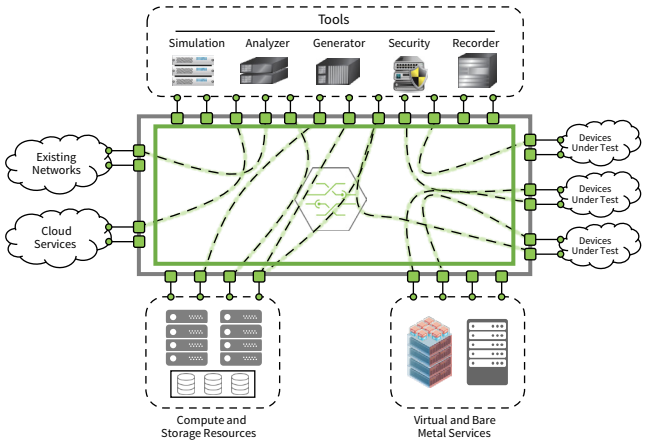

The VirtualWire solution provides physical Layer 1 connectivity, enabling interconnected devices to see each other as being directly connected, with all frames transparently passed through the interconnected ports

Use Cases

VirtualWire provides consistent and reliable physical layer connectivity to support virtually any environment that requires continuous transparent interconnection. Some example use cases for VirtualWire connectivity include:

- Test lab interconnection and automation
- Validation and interoperability testbeds
- Lab as a service (LaaS)
- Cybersecurity testing and validation
- Colocation and MSP cross-connect
- Subscriber interconnection

Runs on Open Networking Hardware

The Netvisor ONE OS runs on many Open Compute Project (OCP) and Open Network Install Environment (ONIE) hardware-compliant switches, including the Pluribus Freedom™ Series network switches. Open networking hardware delivers high-performance switching and provides exceptional operational flexibility along with significant cost savings. With the Adaptive Cloud Fabric, capacity is elastic, so additional switches and interfaces can be added as additional ports or bandwidth are needed. This enables seamless expansion to build multi-terabit scale-out designs capable of supporting thousands of end ports and millions of connections to meet the most demanding operational requirements.

Built on deployment-proven switching silicon, modern open networking switches offer higher port densities and a wider range of interface speeds than typical physical Layer 1 switches. This provides operators with a more flexible choice of hardware options to build scale-out networks with any combination of 1, 10, 25, 40 or 100 Gigabit Ethernet interfaces. To save space and reduce the cost per connection, these switches deliver up to 10 times the port density per rack unit (RU) over traditional Layer 1 switches, with support for up to 128x 10G ports and 32x 100G ports in a single RU.

VirtualChassis Enables Scale-Out Deployments

Leveraging the distributed, scale-out architecture of the Adaptive Cloud Fabric, the Pluribus VirtualChassis™ architecture is built using high-performance, cost-effective single-RU fixed configuration switches that collectively operate and behave as a single logical switch. The VirtualChassis is managed as one entity and seamlessly scales to support more than 4,000 ports. This provides the operational and manageability benefits of a chassis without the associated high cost and technical limitations, and a greater degree of operational flexibility.

The VirtualChassis is built using a Clos-based architecture to enable interconnection via a high-speed, non-blocking, low-latency virtualized backplane. In this architecture, the spine switches are dedicated as the fabric interconnect to provide the logical backplane, and leaf switches are dedicated as the device interface switches, or virtual line cards. The virtualized interconnection between the backplane and interface switches uses standard networking connections and transparently passes through all Layer 1 physical connections across the fabric to all devices and end-points.

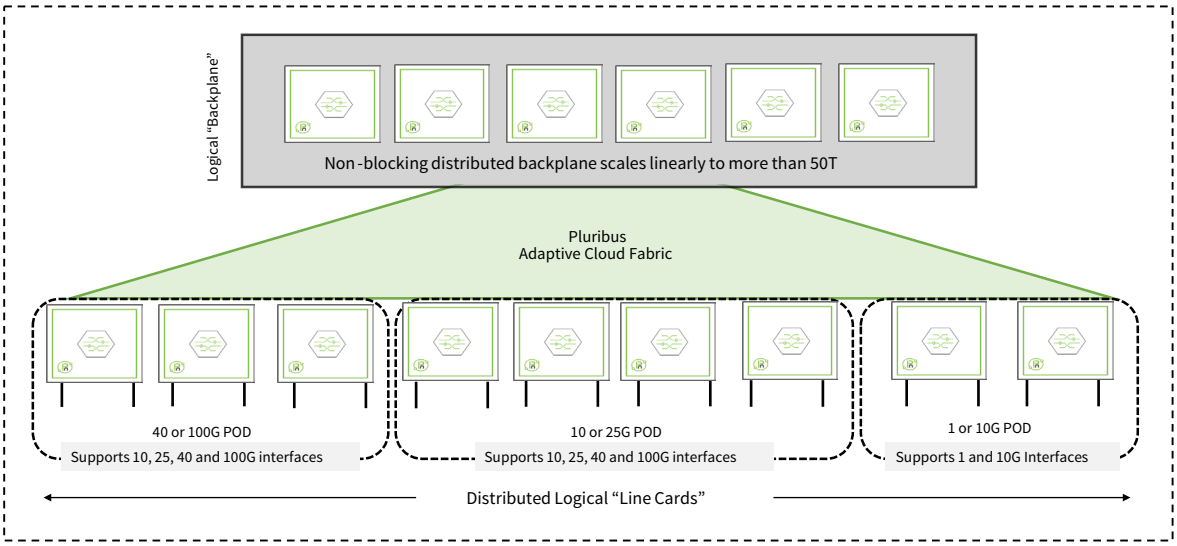

Scale-out Pluribus VirtualChassis located in a single rack, distributed across top of rack or deployed in geographically distributed locations

Backplane capacity is highly elastic and can scale to more than 50 terabits in a single VirtualChassis. This allows building a flexible scale-out architecture that meets changing operational requirements with pay-as-you-grow expandability as additional interfaces or bandwidth are required. As backplane capacity requirements change, such as upgrading to 200 or 400 gigabit links, existing switches can be relocated and reused anywhere in the VirtualChassis architecture to preserve investments and enable unmatched agility.

Like a traditional chassis, the VirtualChassis can be deployed in a single rack to take advantage of existing space, cables and power rails. However, the benefit of the distributed architecture allows for member switches to be disbursed in different racks across horizontal or vertical distances to distribute power consumption and heat dissipation across the environment. This enables deploying switches closer to the devices to be connected to reduce clutter, simplify cabling and distribute high-density connections with shorter cable runs and lower the cost of expensive optics. To enable sharing remote resources across multiple locations, fabric members can be deployed in geographically distributed locations and are seamlessly connected over any existing WAN or core network.

Cable Once and Automate

VirtualWire enables the flexible, low-latency and transparent cross-connection of any combination of switch ports across a single switch or multiple switches across a distributed topology.

Each port can be configured as either a bidirectional connection or a unidirectional connection. Multi-port interconnection allows ingress traffic to be replicated at wire speed to any number of egress switch ports. This enables multiple tools to receive a real-time copy of the targeted traffic.

Transparency to Ethernet Frames and Protocols

All Ethernet frames are transparently delivered at wire speed without any processing or manipulation over the virtualized interconnection. This transparent propagation extends to different Ethertypes, such as MPLS, FCoE and RoCE, and control plane traffic, such as LACP, LLDP and BGP. In addition, malformed or errored packets, such as CRC errors, runt and giant frames are seamlessly passed to allow for transparent failure propagation.

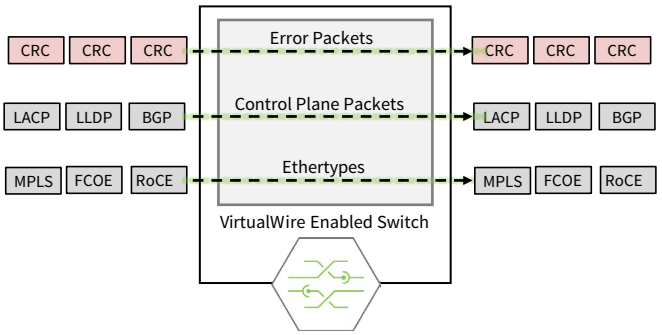

All traffic and Ethernet frames are transparently delivered at wire speed to allow for unmodified, native connectivity and transparent failure propagation

Policy-Based Wire-Speed Filtering

VirtualWire provides sophisticated policy-based traffic filtering to dynamically condition and direct specific traffic flows for specific devices or across multiple devices. Filtering and redirection is performed in hardware at full line rate. Filters can be defined based upon any parameter, such as ingress port, egress port, traffic type, traffic source, traffic destination, VLAN or VXLAN and Layer 4 port. Filters can be applied on a per-device and per-flow basis to filter, isolate, condition or redirect traffic to any egress port in the interconnected architecture.

Low-Latency Media/Speed Conversion

VirtualWire provides transparent speed and media conversion capabilities for all interconnected devices regardless of the supported physical connection type or device speed. This enables mixing a variety of copper and optical connections and fiber transceiver types at speeds spanning 1, 10, 25, 40 and 100 gigabits per second. In addition, interconnection overcomes inherent copper or optical distance limitations, as the VirtualWire-enabled switch will replicate and extend the traffic to the connected end devices across the virtualized backplane.

Link State Tracking

VirtualWire detects if a switch port goes down or an end-device becomes inoperable and propagates notification of state through the fabric to the downstream-connected switch port terminating the other end of the VirtualWire connection.

Port Mirroring and Traffic Replication

VirtualWire delivers wire-speed port mirroring in hardware from any port to any number of ports without any limitation. Advanced Layer 1-4 filtering provides granular control over which traffic or flow is directed to specific tools.

Segmentation and Tenant Services

The Netvisor ONE OS virtualizes the network and distributes the control plane, decoupling network resources from the underlying hardware to enable separate, isolated networks over the same physical infrastructure. Each virtualized network is a container with its own independent network resources, each with different parameters, security services and policy on a per-segment basis. Network containers are not hardware bound, so each network container can be dynamically allocated on demand to any switch, duplicated across switches or moved from one physical switch to another physical switch across the fabric. This unique network virtualization allows a single switch to instantiate multiple virtualized networks to create dynamic network segmentation and tenant services and distribute virtualized network services and functions across the fabric.

Resilient and Highly Available

VirtualWire leverages the extensive production-class network resiliency and high availability capabilities of Netvisor ONE and the Adaptive Cloud Fabric. This enables building fully redundant topologies with zero packet loss for resilient operational requirements. The controllerless SDN design enables a distributed architecture that supports fast reconvergence with sub-second failover across the fabric in the event of equipment or link failures. Leveraging a fully distributed architecture, all fabric interconnection and device links can be fully redundant with multi-path optimal traffic distribution.

Intrinsic Automation Simplifies Operations

Extensive programmability and automation enable building new VirtuaWire topologies in software in a matter of minutes. All configurations are software-defined, enabling provisioning and operational changes to be rolled out quickly with minimal effort. Any VirtualWire-enabled switch can act as the logical management point for the entire fabric. This allows operators to provision and initiate configuration changes for all switches with a single command through command line interface (CLI) or RESTful APIs, reducing configuration time by up to 90% over traditional box-by-box provisioning. As changes are made, configuration, policies and state information are dynamically updated across the fabric in real time. In addition, orchestration can be seamlessly integrated into many popular automation and orchestration platforms, and integration with VMware enables one-touch provisioning of network, virtualized services, compute and storage from the vCenter management console.

Automated Test Configurations

Netvisor ONE maintains multiple VirtualWire configurations within the operating system distributed across the fabric architecture. This allows system operators to define and store any test configuration for later use or reuse. This enables an entire network to be reconfigured on demand in seconds to a pre-defined or previous configuration from a single command, without needing to manually rewire or reconfigure the network.

Integrated with Quali CloudShell

Integration with the Quali CloudShell sandbox enables end-to-end automation and orchestration across a global test lab or interconnect environment. In addition to enabling simple point-and-click provisioning of VirtualWire network connections, the CloudShell sandbox provides lab operators with a unified self-service platform to orchestrate and automate the provisioning of virtually all test lab resources to optimize sharing test configurations and access to distributed lab resources across geographic regions.

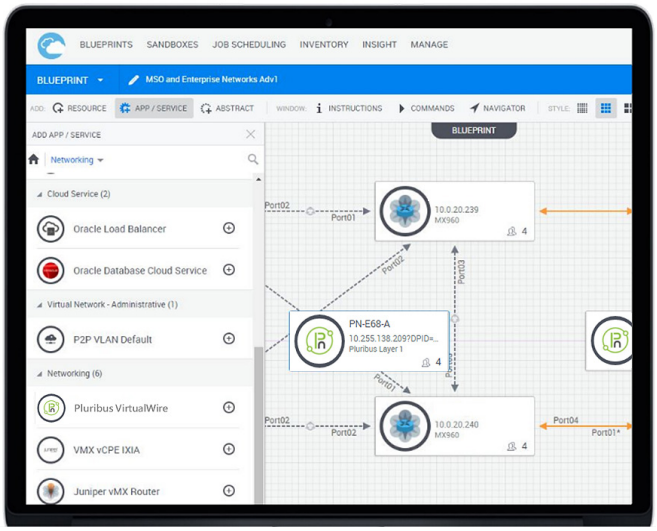

Quali CloudShell provides point-and-click provisioning for VirtualWire deployments and enables simple yet powerful automation across the entire test lab operating environment

Integrated Network Visibility and Analytics

In addition to industry-standard sFlow monitoring, embedded Netvisor ONE telemetry provides wire-speed monitoring for granular insight into the performance characteristics of test connections and application conversations. This enables real-time visibility to track the dynamic behavior of test lab traffic, including end-to-end latency, duration, total bytes transferred and the state of TCP connections. Real-time and historical data for the entire network is available, or visibility can be partitioned based upon unique segmented test environments, specific tools or specific connection pairs, with the separation of performance data access to meet compliance requirements.

All performance metrics are stored locally as lightweight metadata and can be viewed through CLI queries, delivered via APIs or IPFIX to other monitoring systems or fed into the Pluribus Insight Analytics™ performance monitoring platform for longer-term storage and analysis.

Integrated Packet Capture

Compatible open networking switches support integrated packet capture and local storage of native packet-flow data in standard packet capture (pcap) formats for deep protocol analysis requirements. Packet captures can be initiated on demand, or automatically triggered by specific events and can be filtered to only capture targeted user-defined traffic. Captured pcap files are stored on each switch and can be analyzed locally to eliminate unnecessary network traffic created by sending capture files across the network.

Summary

The VirtualWire solution leverages the power of next-generation SDN technology to transform how physical layer connectivity networks are built and operated. By leveraging the flexibility and exceptional value of open networking switches, organizations are able to build highly scalable and dynamic environments that enable them to cable once and automate operations. The result is a data center-class fabric that delivers high-performance Layer 1 interconnection to build test lab environments that are an exact replication of a production environment. The distributed architecture simplifies deployments within a single location and enables interconnection across geographically distributed locations to support very large-scale operations. Automation dramatically simplifies operations, improves equipment utilization and reduces provisioning time, enabling rapid topology changes without touching a cable.

Copyright © 2018 Pluribus Networks, Inc. All Rights Reserved. Netvisor is a registered trademark, and The Pluribus Networks logo, Pluribus Networks, Freedom, Adaptive Cloud Fabric, Insight Analytics, UNUM, VirtualChassis and VirtualWire are trademarks of Pluribus Networks, Inc. All other brands and product names are registered and unregistered trademarks of their respective owners. Pluribus Networks reserve the right to make changes to its technical information and specifications at any time, without notice. This document describes features that may require separate licensed software to function as described and describes functionality that is dependent on the underlying open networking hardware device. Functionality will vary by physical device, and not all capabilities described herein will work on every device.
PN-PO-VWS-050818

Pluribus Networks, Inc.
www.pluribusnetworks.com